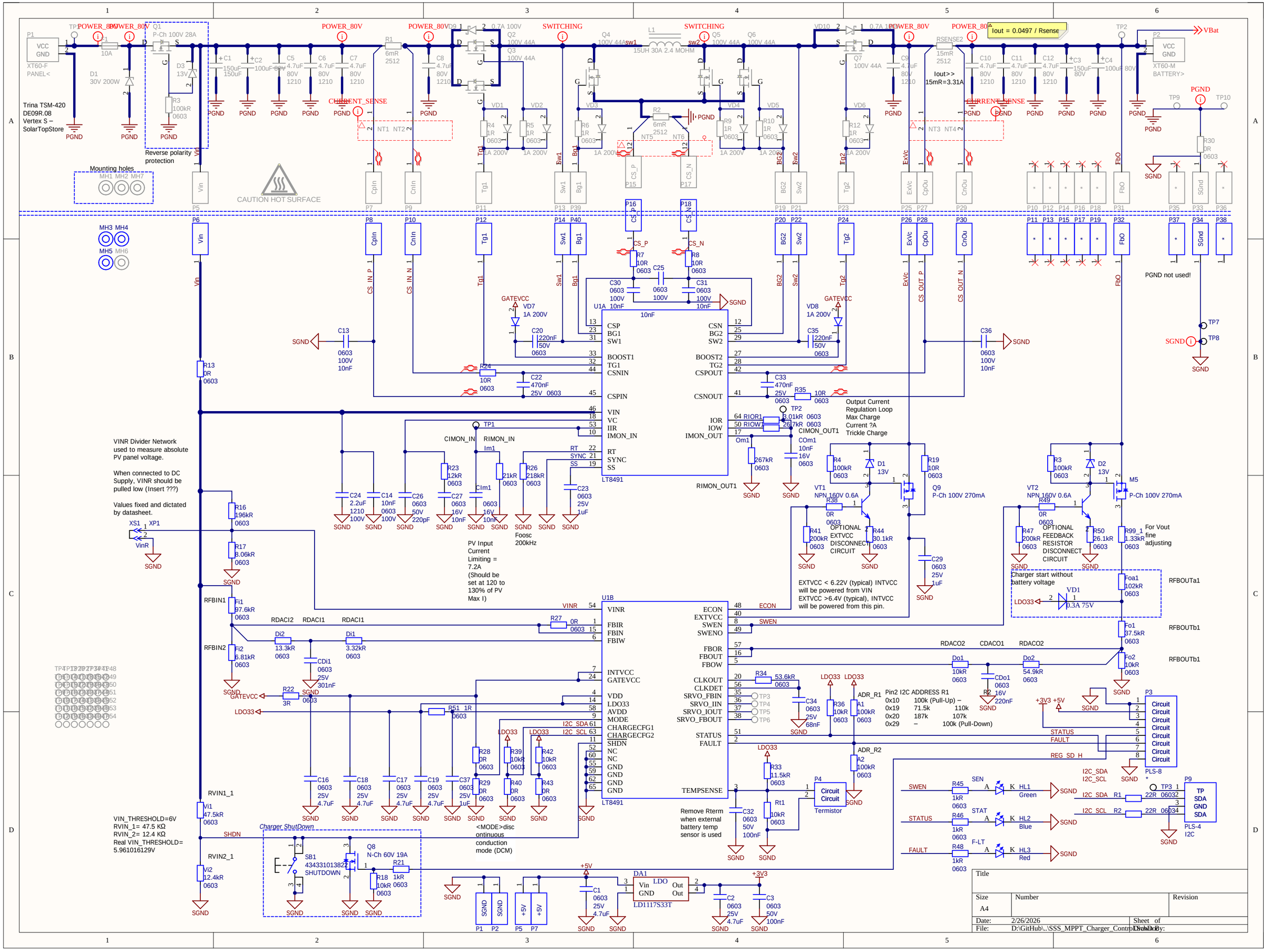
Iout = 0.0497 / Rsense
Iout>> 15mR=3.31A
Trina TSM-420
DE09R.08
Vertex S –
SolarTopStore
Reverse polarity protection
Mounting holes
CAUTION HOT SURFACE
PGND not used!
VINR Divider Network used to measure absolute PV panel voltage.
When connected to DC Supply, VINR should be pulled low (Insert ???)
Values fixed and dictated by datasheet.
PV Input Current Limiting = 7.2A (Should be set at 120 to 130% of PV Max I)
Foosc 200kHz
Output Current Regulation Loop Max Charge Current ?A Trickle Charge
OPTIONAL EXTVCC DISCONNECT CIRCUIT
OPTIONAL FEEDBACK RESISTOR DISCONNECT CIRCUIT
EXTVCC < 6.22V (typical) INTVCC will be powered from VIN
EXTVCC >6.4V (typical), INTVCC will be powered from this pin.
Charger start without battery voltage
For Vout fine adjusting
Pin2 I2C ADDRESS R1
0x10 100k (Pull-Up) –
0x19 71.5k 110k
0x20 187k 107k
0x29 – 100k (Pull-Down)
Remove Rterm when external battery temp sensor is used
VIN_THRESHOLD=6V
RVIN_1= 47.5 KΩ
RVIN_2= 12.4 KΩ
Real VIN_THRESHOLD= 5.961016129V
Charger ShutDown
<MODE>discontinuous conduction mode (DCM)
LT8491
LD1117S33T
Title
Size A4
Number
Revision
Date: 2/26/2026
Sheet of
File: D:\GitHub\..\SSS_MPPT_Charger_Contrl.DsnDrawn By: